STEP 7

7.1 Attach Drawer Slider(5B)to Keyboard Panel(C)using Screw(6),as shown.

7.2 Attach Keyboard Stopper(8)to Keyboard Panel(C)using Power Pin(9),as shown.

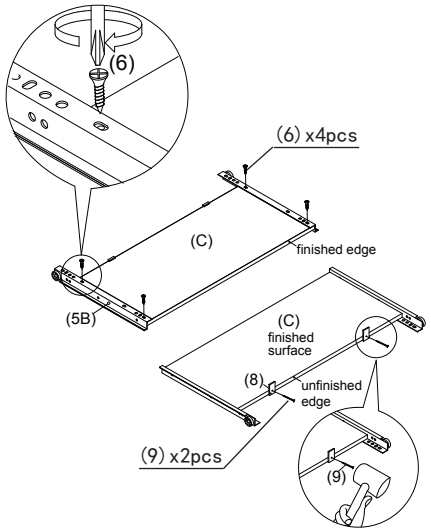

STEP 8

Slide Keyboard Panel(C)to the assembled unit ,as shown:

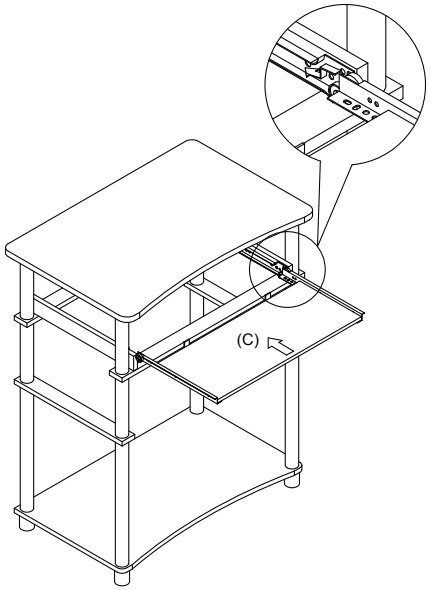

Recommended Maximum Weight

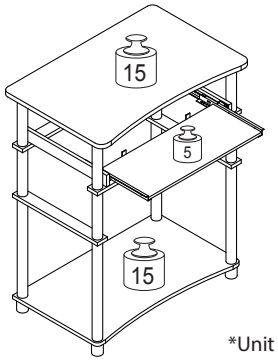

*Unit in Pound(lbs)

WARNING:

>This unit has been designed to support the maximum loads shown. Exceeding these load limits could cause sagging, instability, product collapse, and/or serious injury.

>DO NOT allow children to climb on unit.

>Put heavier items on lower shelves.

Furinno®
Fits Space. Fits Budget

Assembly Instruction

Furinno Home Laptop Notebook Computer Desk

MODEL : **10016**
DIMENSION : 23.6”(W) x 29.6”(H) x 15.6”(D)

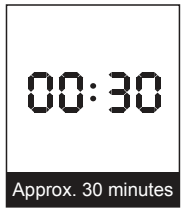

Approx. 30 minutes

Recomm. 1 Person

Tools Required

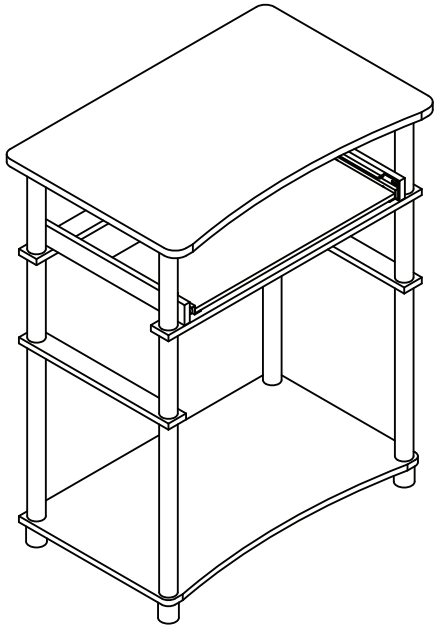

Customer Service
Tel/Fax: 281.500.9372
Toll Free: 773.299.8111 (Mon - Fri 9am - 5pm)
Email: support@furinno.com

www.furinno.com Find us on Facebook Pinterest

No	Hardware List	Qty
1	Long Tube	4pcs
2	Short Tube	8pcs
3	Short Leg	4pcs
4	Insert Cap	4pcs
5	Drawer Slider (5A) x 2pcs (5B) x 2pcs	1pcs
6	Short Screw	8pcs
7	Long Screw	4pcs
8	Keyboard Stopper	2pcs
9	Power Pin	2pcs

No	Parts List	Qty
A	Top Panel	1pcs
B	Bottom Panel	1pcs
C	Keyboard Panel	1pcs
D	L/R Slider Panel	2pcs
E	F/B Apron	2pcs
F	L/R Cross Bar	2pcs

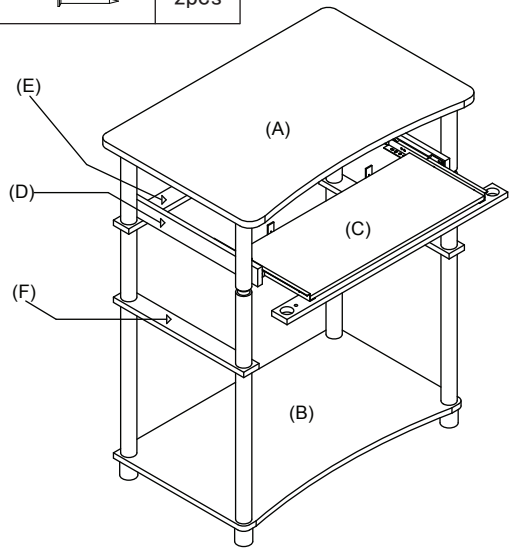

USEFUL HINTS BEFORE YOU START:

1. Read each step carefully before starting.
2. It is important that each step is performed in correct order to avoid difficulties.
3. Identify, sort and count the parts before assembly.
4. Assemble your furniture on packaging cardboard to prevent scratch or damage.
5. Clean the product with mild cleanser using soft damped cloth. Do not use harsh or abrasive cleanser.
6. Using uncompatible hardware might cause damage to product.

STEP 1

Attach Insert Cap(4)to Top Panel(A)using Short Tube(2), as shown.

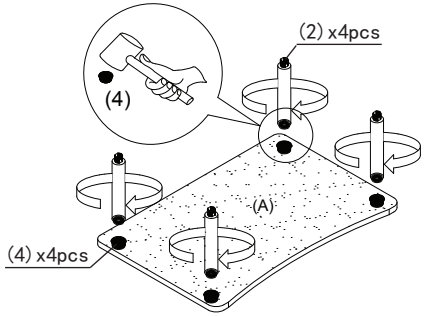

STEP 2

Attach Drawer Slider(5A)to L/R Slider Panel(D)using Screw(6), as shown.

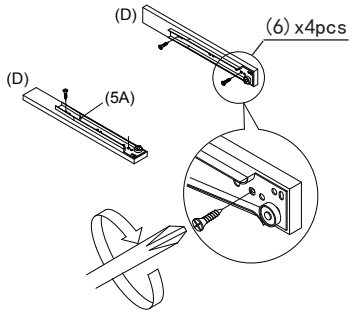

STEP 3

Attach F/B Apron Panel(E)to assembled parts from Step 2, using Long Screw(7), as shown.

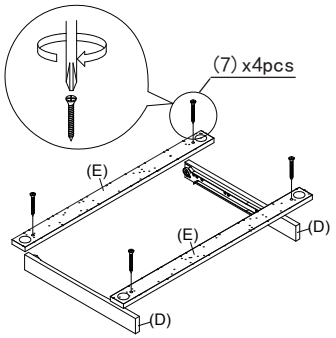

STEP 4

Attach Short Tube(2)to assembled parts from Step 1 & Step 3, as shown.

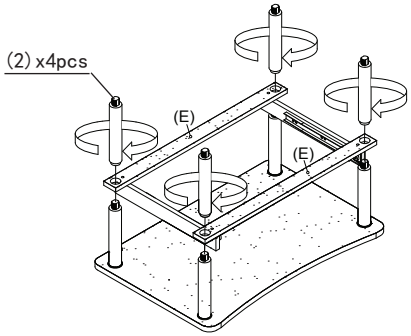

STEP 5

Attach L/R Panel(F)to assembled parts from Step 4, using Long Tube(1), as shown.

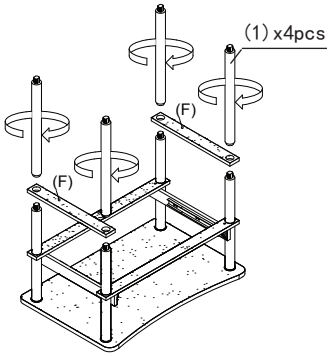

STEP 6
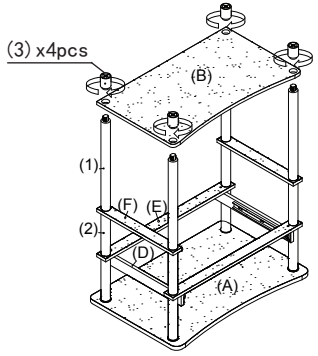
Attach Bottom Panel(B)to assembled parts from Step 5, using Short Leg(3), as shown.